Technical Specifications:
1.Operating Temperature: −40° C～+125° C.
2.Current Rating: 200 A (MAX).
⚠ 3.Operating Voltage:1500 VDC.
500 VAC (HVIL).
<S/C> ▲ 4.Dielectric Withstanding Voltage: 4000 VAC & 6000 VDC.
<S/C> ▲ 5.Protection Class:IP68 & IP6K9K;
IPXXB & IPXXD.
▲ 6.Insulation ressitance: 2GΩ.
550MΩ (HVIL).
7.Shielding (The shielding function is limited to shielding products)
8.Mating Cycle:100 Min.
9.Automatic Secondary Lock.
10. HVIL (HVIL functionality is limited to HVIL products)
11. Matching plug: PRC18−201/PRC28−201/PRC48−201/PRC58−201

Ordering Information

PRC 20 − 20 1 −10 D 8 − Y01

20:	HVIL:	Hole Type	Hole Size:	Salt spray:
2POS RCPT	0,No HVIL 1,With HVIL	D,Through hole M,Screw hole H,Slotted hole	6,Match M6 Screw 8,Match M8 Screw	Default,96 hour Y01,336 hour Y02,480 hour

REVISIONS					
REV	ECN#	DESCRIPTION	REV.BY	APPR.BY	DATE
A1	- -	Initial release	W.FS	M.D	2023/6/2
B	ECN-2024-001	Change parameters	W.FS	M.D	2024/1/22

Customer Drawing

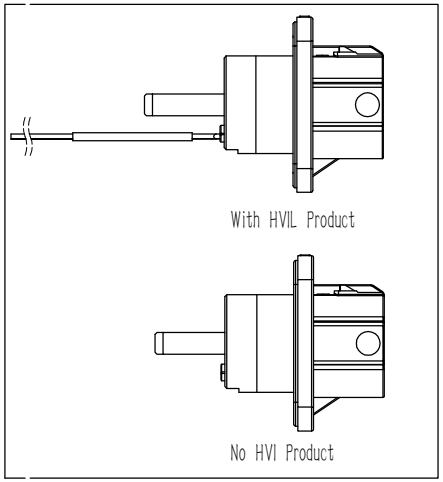

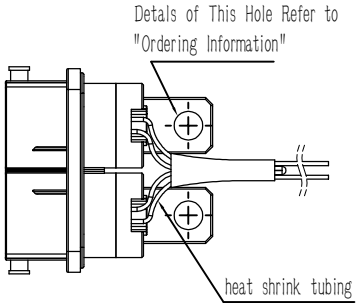

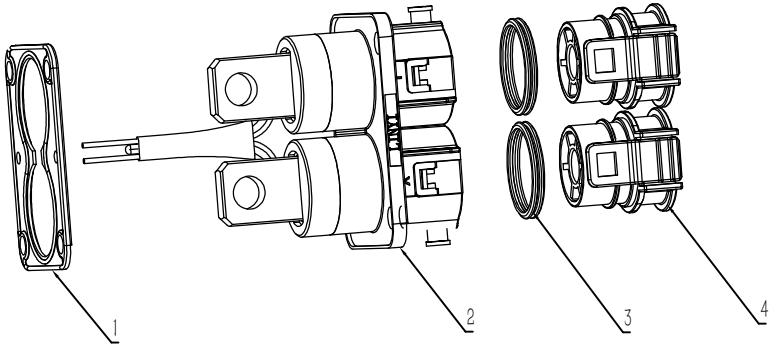

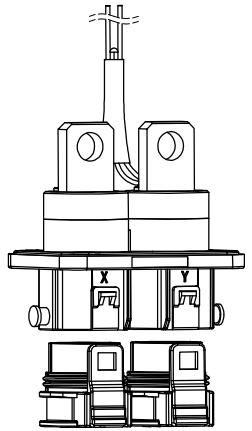

With HVIL Product	
P/N	product description
PRC20−201−10D6	PRC200A 2POS HVIL copper busbar D6
PRC20−201−10D8	PRC200A 2POS HVIL copper busbar D8
PRC20−201−10M6	PRC200A 2POS HVIL copper busbar M6
PRC20−201−10M8	PRC200A 2POS HVIL copper busbar M8
PRC20−201−10H6	PRC200A 2POS HVIL copper busbar H6
PRC20−201−10H8	PRC200A 2POS HVIL copper busbar H8
No HVIL Product	
P/N	product description
PRC20−200−10D6	PRC200A 2POS copper busbar D6
PRC20−200−10D8	PRC200A 2POS copper busbar D8
PRC20−200−10M6	PRC200A 2POS copper busbar M6
PRC20−200−10M8	PRC200A 2POS copper busbar M8
PRC20−200−10H6	PRC200A 2POS copper busbar H6
PRC20−200−10H8	PRC200A 2POS copper busbar H8

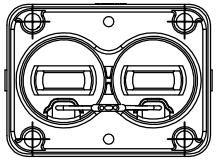

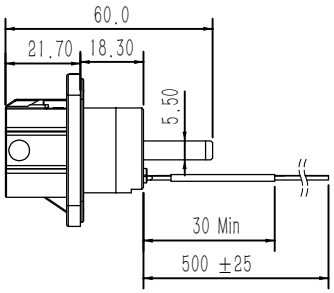

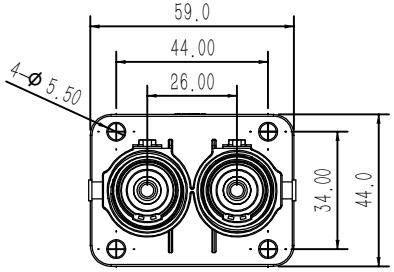

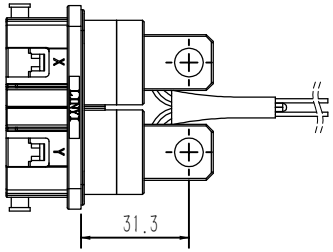

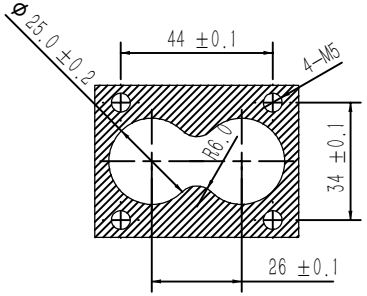

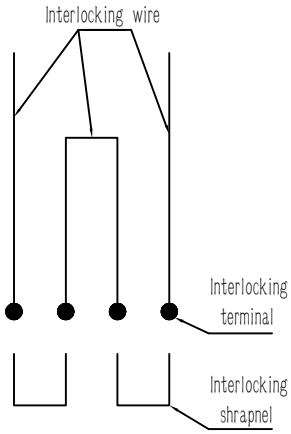

High voltage interlock wiring diagram

No.	Part name	Material	Qty
4	Dust cap	PP	2
3	seal ring	silicon rubber	2
2	body	/	1
1	seal	fluororubber	1

BALE		Chengdu City Bale New Energy Technology Co. Ltd			
		WEIGHT	MATERIAL: /		PART NAME: PRC 200A 2POS RCPT
SIGNATURE		DATE	SHEET	No tolerance(mm):	CUST P/N: SEE TABLE
DRAWN	W.FS		1/1	x.: ±1.0 x..: ±0.5 x...: ±0.2	
CHECKED	M.D		ANGLE OF VIEW	Angle: ±2°	DWG NO: PRC20-201
APPROVAL	M.D				

THE COPYRIGHT BELONGS TO BALE